Garlock

PS-SEAL® PTFE based high-performance seals

TÜV CERT
DIN EN ISO 9001
Zertifikat: 09 100 6466

TÜV CERT
DIN EN ISO 14001
Zertifikat: 01 104 031904

Garlock
SEALING TECHNOLOGIES®
an EnPro Industries company

Contents

Introduction

PS-SEAL® high-performance seals work with the lip element made of modified PTFE.

This material is produced under the name GYLON® using a method developed by Garlock.

The PS-SEAL® product family is manufactured specially for the reliable sealing of rotating shafts at high peripheral speeds, pressures and temperatures against aggressive media.

These applications were traditionally sealed with elastomeric radial shaft seals to a limited extent, if at all.

PS-SEAL® seals are a viable alternative to mechanical seals and packed glands.

Advantages

- can be used on pressure and vacuum duties
- suitable for high peripheral speeds
- temperature-resistant up to +260 °C
- excellent chemical resistance
- usable in the food and pharmaceutical sectors
- good dry-running characteristics
- low friction and wear-resistant

The PS-SEAL® product family offers economic and practical solutions to a wide range of applications. Garlock manufacturing capacity offers everything under one roof, from standard to special customised seals.

PS Standard
Standard seal available from stock

PS Non Standard
Customised standard seal

PS Special
Customised special seal

PS Lip
Customised sealing lip material for own installation

PS Cartridge
Customised sealing unit

PS Cartridge – floating seal assembly
Customised sealing unit with integrated expansion joint for high shaft run-outs

Technical data

Seal case

The PS-SEAL® standard seal cases are produced from 1.4571 (316 L) stainless steel. Other material options are available on request.

Operating pressures

PS-SEAL®	Standard	up to 10 bar
PS-SEAL®	Lip	up to 25 bar
PS-SEAL®	Special	up to 25 bar

Where the maximum pressure rating is applied, the P x V factor must be checked. In addition, the gap between the seal case and the shaft is critical.

See the section on application limits.

Temperature limit

The GYLON® lip material has temperature limits of –90 °C to +260 °C. The working temperature is not the same as the operating/process temperature. Additional energy/heat is released through friction.

Materials

The seal lip material GYLON® is the most important component of the PS-SEAL® and significantly responsible for the successful performance of the PS-SEAL® range.

Different material combinations are available to take account of varying application requirements in the chemical, food, pharmaceuticals and engineering industries.

Running surface

Attention must also be paid to the running surface, which plays a critical role in sealing integrity.
The following surface should be achieved to optimise maximum sealing performance with low wear rates.
Garlock can supply a package consisting of seal and correct wear sleeve to suit your particular application.

Surface roughness

Ra = 0.1 – 0.4 µm

Rz = 0.65 – 2.5 µm

Rmax = 4 µm

The grinding of the running surface should not induce helical spiralling indentations. Leakage can occur through the conveying effect that this creates.

Surface hardness

45 HRC at ≤ 1.5 bar pressure load

60 HRC at > 1.5 bar pressure load

With high P x V values over 20 bar x m/s we recommend a plasma coating with chromium oxide or chromium carbide, multi-wheeled tool traverse ground.

Seal lip material

	Contents	Properties
GYLON® BLACK	Graphite	- Standard material - Excellent in lubricated application
GYLON® WHITE	Barium sulphate	- Special material - FDA approved - Suitable for Dairy, Pharma, and Food Industry
GYLON® BLUE	Glasmicrosphere	- Special material - With FDA conformity - Suitable for Dairy, Pharma, and Food Industry - Excellent in dry-running applications
F	Econol	- Special material - FDA approved - Suitable for Dairy, Pharma, and Food Industry - Excellent in dry-running applications
MS	Molybdenum sulphide	- Special material - Against abrasive media
KF	Carbon fibre	- Special material - Against water and partly abrasive media

Technical data

Application limits

The simultaneous occurrence of different operating parameters of pressure and peripheral speed make it necessary to check the application limits. The following P x V diagram identifies the application limits for GYLON® black and GYLON® white.

Unfavourable lubrication conditions such as non-existant, defective or boundary lubrication make it necessary to reduce the max. permissible P x V factors and to have an optimum running surface.

p x v diagram for PS-SEAL®

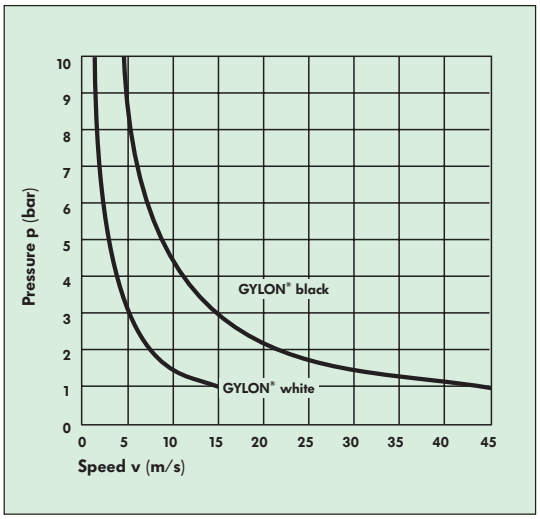

The P x V values shown in the above diagram apply for full lubrication and approx. 100 °C operating temperature, in addition to all PS-SEAL® types to 10 bar pressure.

Power loss through abrasion at the seal lip

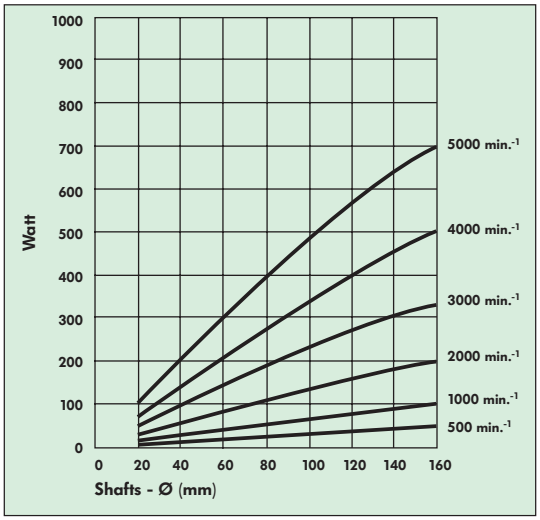

The wear rates shown represents a standard value determined under laboratory conditions. The material abrasion loss may be up to 50 % less under operating conditions with media temperatures of 80-100 °C.

Test conditions:
Motor oil 15 W 40,
Ambient room temperature

Permissible radial runout

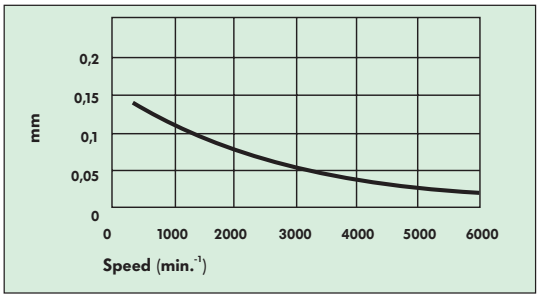

Permissible centre runout

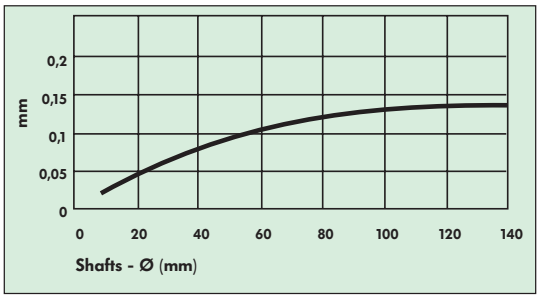

PS Standard / PS Non Standard

PS Standard

The PS Standard Seal is available from stock with a stainless steel case and a GYLON® black seal lip.

The following dimensions are in stock with immediate delivery.

Deviating dimensions and materials are also available as PS Non Standard or PS Special. We can assist with a suitable design upon request.

Installation dimensions

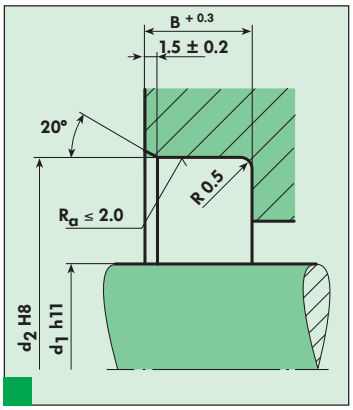

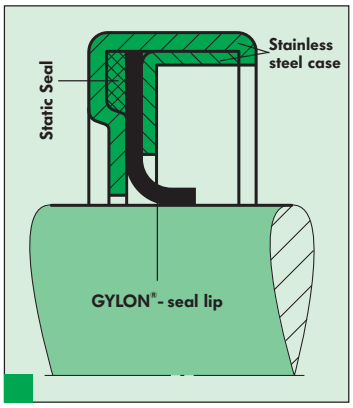

PS Non Standard

Garlock PS-SEAL® in standard sizes are also available with different PS-SEAL® Lip configurations and materials.

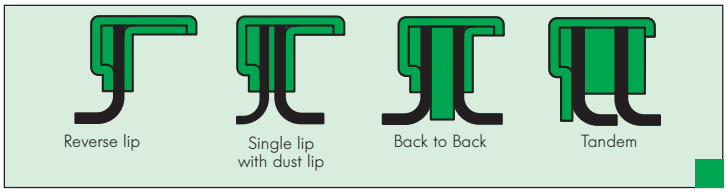

Dimensions list PS Standard

Article no:	d1*	d2*	B*
MEC03-10005	8.0	18.0	5.0
MEC03-10048	10.0	22.0	6.0
MEC03-10006	12.0	28.0	8.0
MEC03-10007	15.0	30.0	8.0
MEC03-10008	16.0	30.0	8.0
MEC03-10010	17.0	28.0	8.0
MEC03-10009	17.0	35.0	8.0
MEC03-10011	20.0	35.0	8.0
MEC03-10012	22.0	40.0	8.0
MEC03-10014	25.0	35.0	8.0
MEC03-10013	25.0	42.0	8.0
MEC03-10050	25.0	52.0	7.0
MEC03-10015	28.0	47.0	10.0
MEC03-10016	30.0	47.0	10.0
MEC03-10017	32.0	47.0	8.0
MEC03-10018	32.0	47.0	10.0
MEC03-10019	35.0	47.0	8.0
MEC03-10020	35.0	50.0	10.0
MEC03-10027	38.1	63.5	12.7
MEC03-10021	40.0	55.0	10.0
MEC03-10022	40.0	60.0	10.0
MEC03-10023	40.0	62.0	10.0
MEC03-10049	40.0	68.0	10.0
MEC03-10025	42.0	62.0	8.0
MEC03-10024	42.0	60.0	10.0
MEC03-10026	45.0	62.0	10.0
MEC03-10028	45.0	65.0	10.0
MEC03-10029	48.0	65.0	10.0
MEC03-10030	50.0	65.0	10.0
MEC03-10031	50.0	70.0	10.0
MEC03-10032	50.0	72.0	10.0
MEC03-10033	55.0	72.0	10.0
MEC03-10035	60.0	75.0	8.0
MEC03-10036	60.0	80.0	10.0
MEC03-10037	62.0	80.0	10.0
MEC03-10038	65.0	85.0	10.0
MEC03-10039	70.0	90.0	10.0
MEC03-10040	73.0	100.0	10.0
MEC03-10041	75.0	100.0	10.0
MEC03-10042	75.0	95.0	13.0
MEC03-10043	80.0	100.0	10.0
MEC03-10054	85.0	120.0	12.7
MEC03-10044	90.0	110.0	10.0
MEC03-10051	95.0	120.0	12.0
MEC03-10001	100.0	130.0	13.0
MEC03-10002	110.0	140.0	13.0
MEC03-10052	120.0	150.0	12.0
MEC03-10003	140.0	165.0	10.0
MEC03-10053	150.0	180.0	12.0

*Dimensions in mm

PS Lip

We recommend the PS Lip design for shaft seals where the Standard or Special PS-SEAL® cannot be used for reasons of restrictive space or construction.

See the following tables and drawings for the recommended installation dimensions.

Precise cut static gaskets are supplied to achieve a good fit in the installation space available. These are made of FKM (Viton) as standard, but GYLON® white or blue can be offered as an alternative where process media demands.

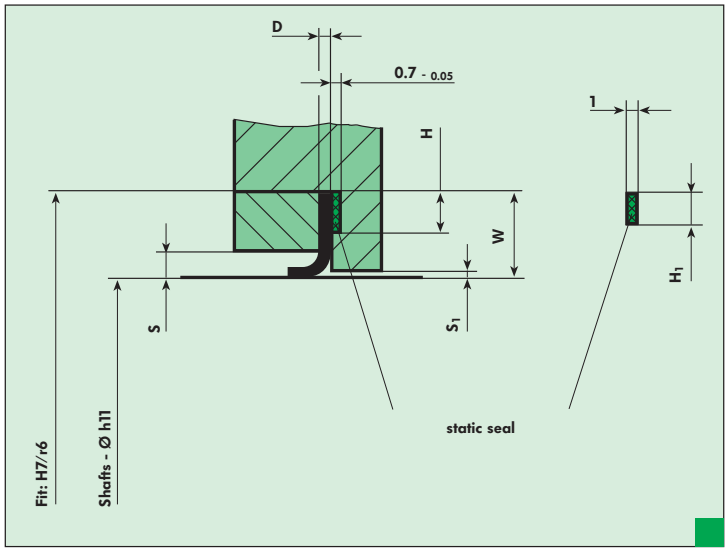

Shafts - Ø	W	D	H	H_1	S	S_1		
						5 bar	10 bar	25 bar
up to 19	6	0.8	2.5	2.0	2.0	2.0	0.5	0.2
20-49	7.5	0.8	3.5	2.5	2.5	2.5	0.5	0.2
50-149	10	1.0	4.5	3.5	3.0	3.0	0.5	0.2
150-299	12.5	1.0	6.0	4.5	3.0	3.0	0.5	0.2
300-450	15	1.0	8.0	6.0	3.0	3.0	0.5	0.2

Example of order for shafts - Ø 100:
Garlock PS Lip Ø 100 x 120 x 1 mm
Static seal - Ø 113 x 120 x 1 mm

PS Special

The application range for the PS-SEAL® high-performance seal is so great and varied, that the PS Standard or PS lip is not always the optimal solution for the duty.

Therefore, Garlock has standardised the dimensions of additional seal versions with single and double lip configurations to offer customers an economical seal for special applications.

We recommend that you consult our specialists in the use of these PS-SEAL® versions.

The PS Special is also available in many additional material versions, as well as the standard materials shown here.

PS Special, Back to Back

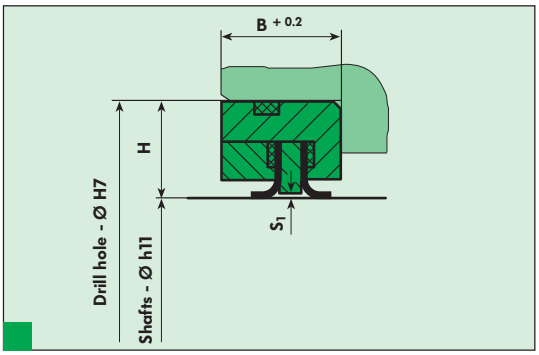

Shafts - Ø	H	B	S1 5 bar	S1 10 bar	S1 25 bar
up to 19	10	12	2.2	0.5	0,2
20-64	12.5	15	2.5	0.5	0.2
65-119	15	17	3.0	0.5	0.2
120-199	17	20	3.0	0.5	0.2
200-299	20	24	3.0	0.5	0.2
300-450	25	25	3.0	0.5	0.2

Example of order for shafts - Ø 100; 10 bar:
Garlock PS Special, Back to Back
100 x 130 x 17 mm; 10 bar with O-Ring

PS Special, Single Lip

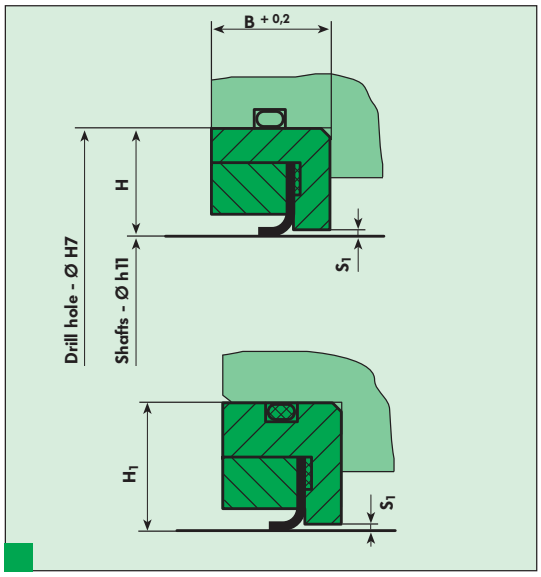

Shaft - Ø	H	H1	B	S1 5 bar	S1 10 bar	S1 25 bar
up to 19	8	10	8	2.2	0.5	0.2
20-64	11	12.5	10	2.5	0.5	0.2
65-119	14	15	10	3.0	0.5	0.2
120-199	15	17	12	3.0	0.5	0.2
200-299	17.5	20	15	3.0	0.5	0.2
300-450	20	25	20	3.0	0.5	0.2

Example of order for shafts - Ø 100; 10 bar:
Garlock PS Special 100 x 128 x 10 mm; 10 bar
Example of order with O-Ring:
Garlock PS Special - 100 x 130 x 10 mm; 10 bar with O-Ring

PS Special, Tandem

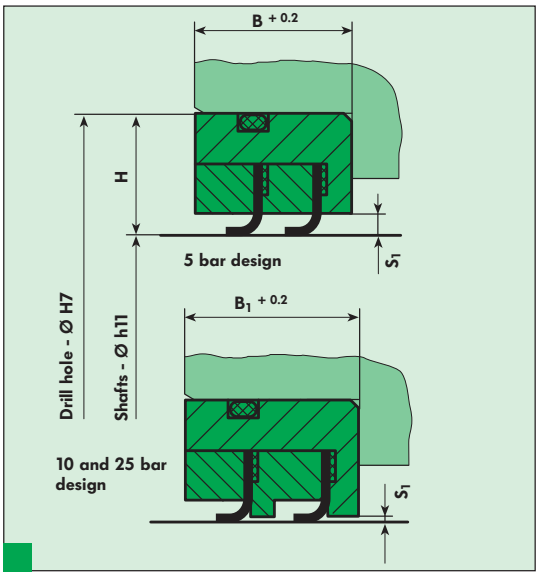

Shaft - Ø	H	B	B1	S1 5 bar	S1 10 bar	S1 25 bar
up to 19	10	14	16	2.2	0.5	0.2
20-64	12.5	17	19	2.5	0.5	0.2
65-119	15	18	20	3.0	0.5	0.2
120-199	17	20	24	3.0	0.5	0.2
200-299	20	23	26	3.0	0.5	0.2
300-450	25	25	30	3.0	0.5	0.2

Example of order for shafts - Ø 100; 10 bar:
Garlock PS Special, Tandem
100 x 130 x 20 mm; 10 bar with O-Ring

PS Cartridge

The PS Cartridge is manufactured as a unitized solution for individual problem cases.

This design is recommended for equipment where the focus is on fast maintenance and safety inspections.

The basic concept of the PS Cartridge is the separation of the seal arrangement on the shaft from the fixed casing components coupled together with a permanent resilient connector.

PS Cartridge – floating seal assembly

The PS Cartridge – floating assembly is another design variation of the PS Cartridge.

Predominately used where there are large shaft run-outs in the sealing area where maintaining concentricity is a problem and which can only be contained with special flexible compensator units.

Individual advice and design recommendations from Garlock are essential for the PS Cartridge – floating seal assemblies.

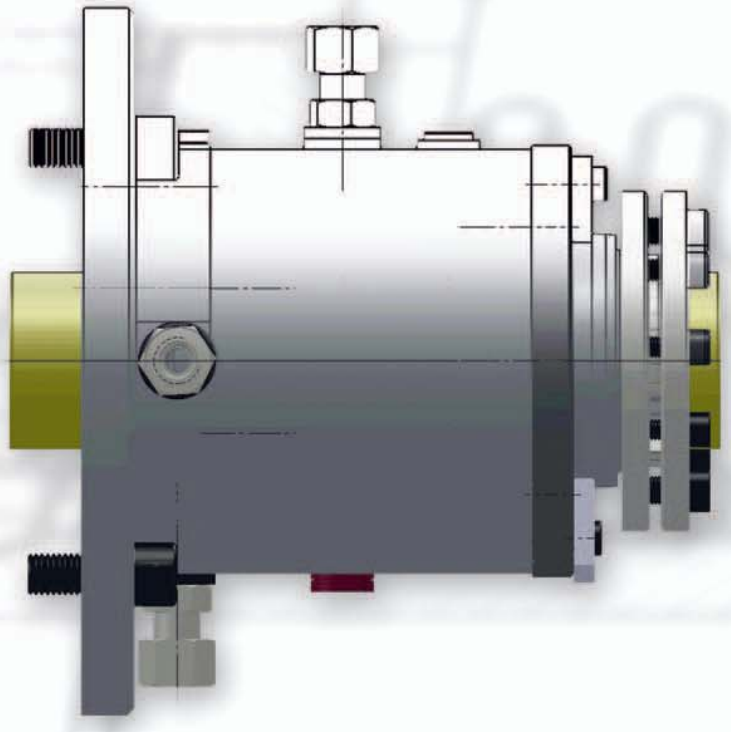

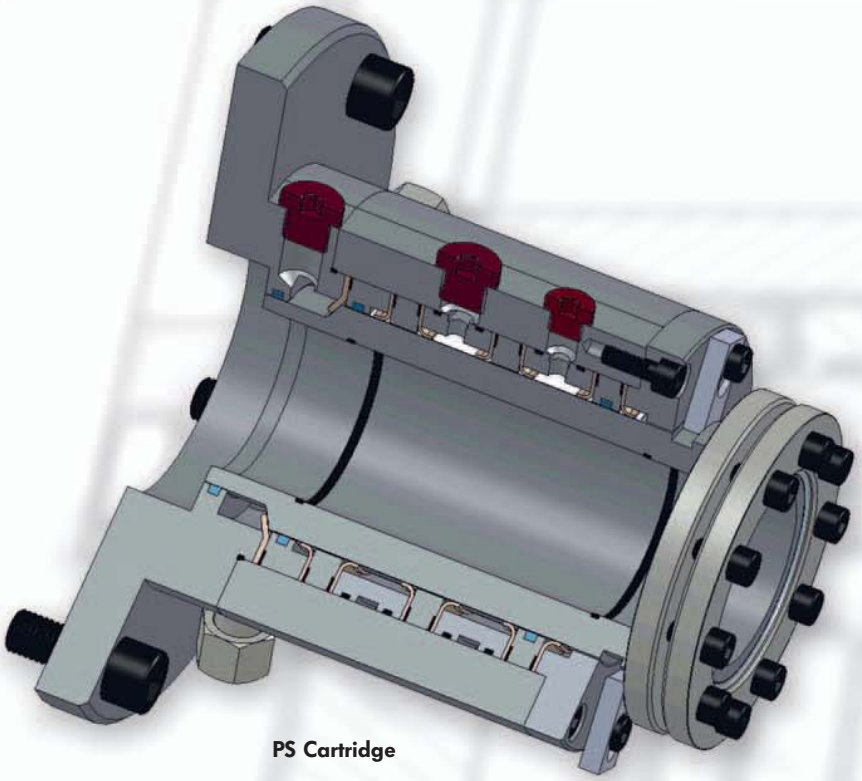

PS Cartridge

PS Cartridge

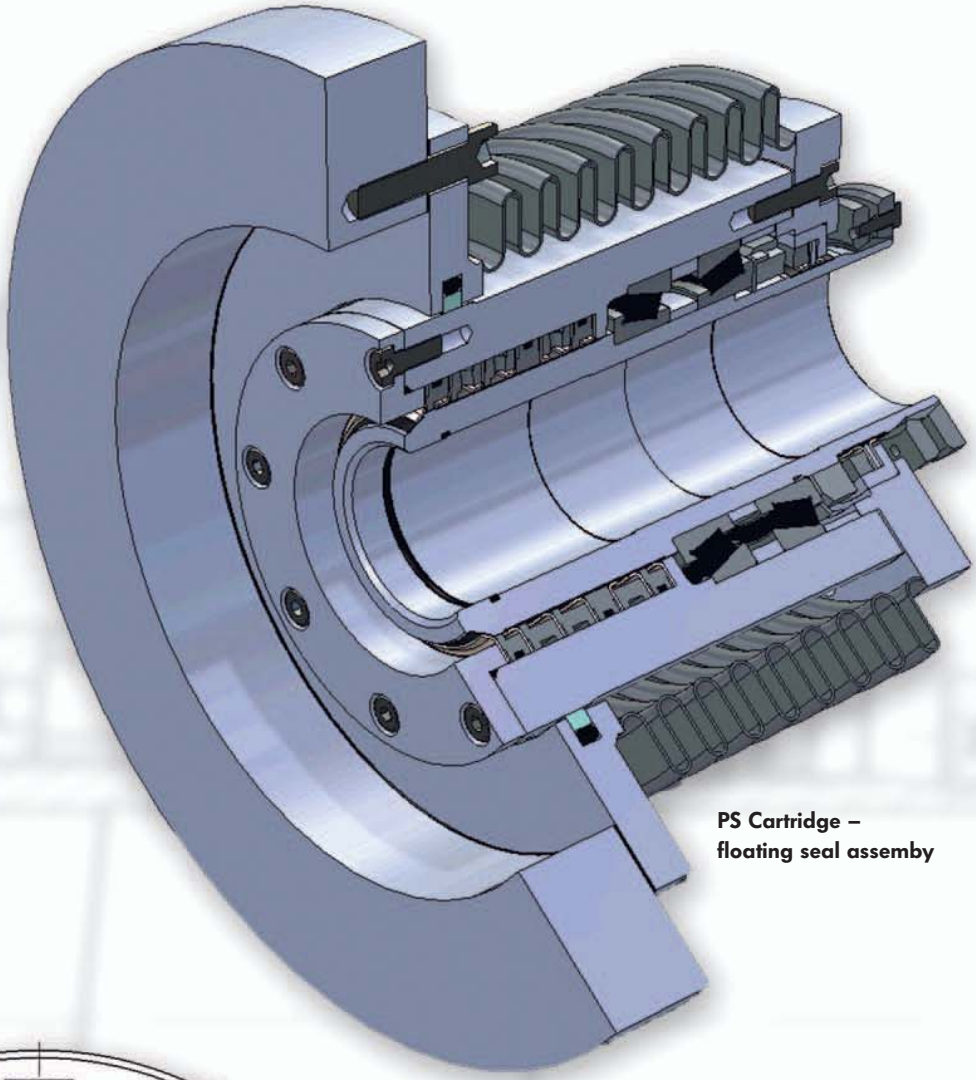

PS Cartridge –
floating seal assemby

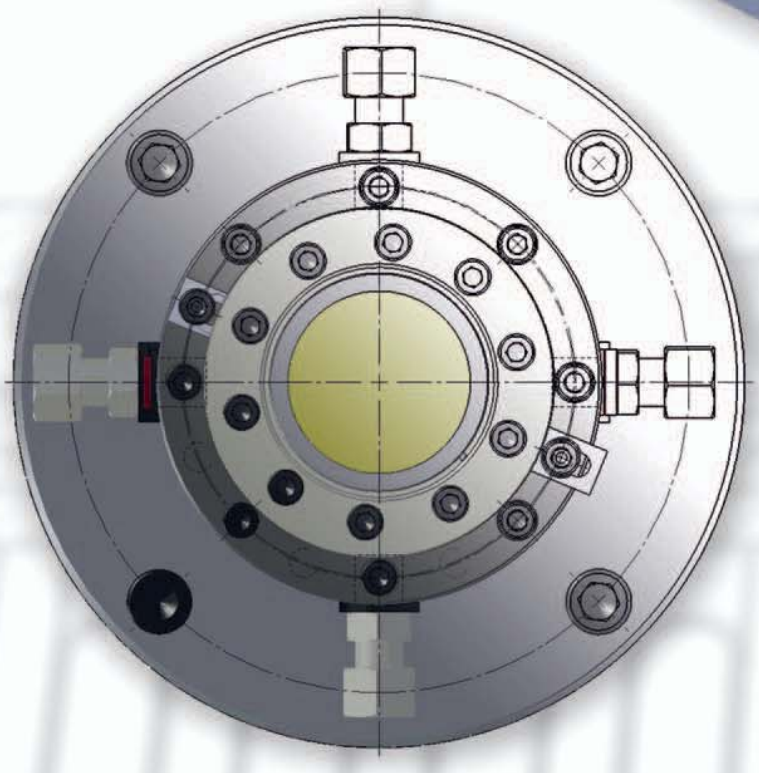

Garlock
SEALING TECHNOLOGIES®
an EnPro Industries company

Installation and assembly information

The seal lip of the Garlock PS-SEAL® must be installed undamaged. Never install it over sharp edges, lips and keyways without taking proper precautions

When the GYLON® seal lip is installed with it's back to the shaft (Pic. 1), radii or lead-in chamfers are to be provided to the end of the shaft. All edges should be rounded and polished.

When the GYLON® seal lip is mounted in the direction of the shaft end, a lead-in chamfer of approx. 10° is necessary. If this is not possible for construction reasons, we recommend that a separate cone be manufactured fo facilitate correct installation.

Pictures 2 and 3 show the lead-in chamfers and examples for designing the installation cone.
The surfaces of the installation aids must be smooth and free from grooves. All edges must be rounded.

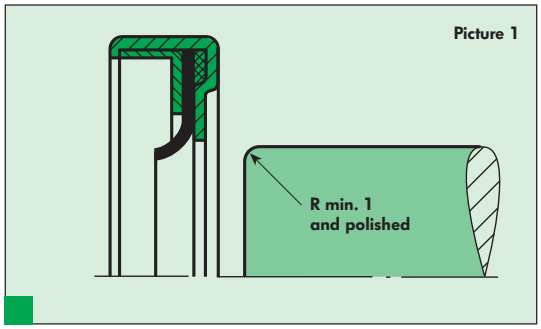

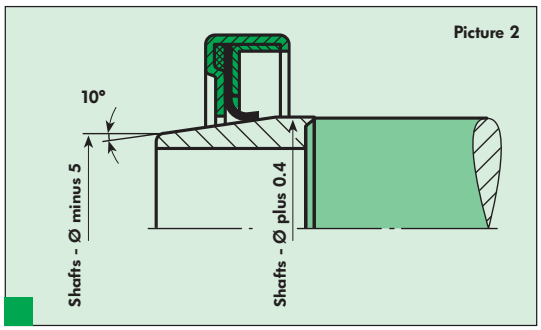

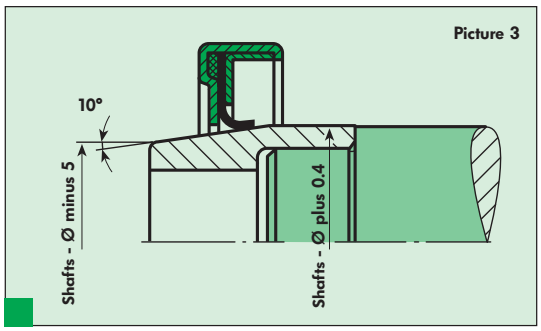

Service

Garlock would be pleased to advise you on the seal design specific to your application.

To guarantee a quick service and response, please ask for our application data sheet. On the basis of your information we will send you an offer as soon as possible.

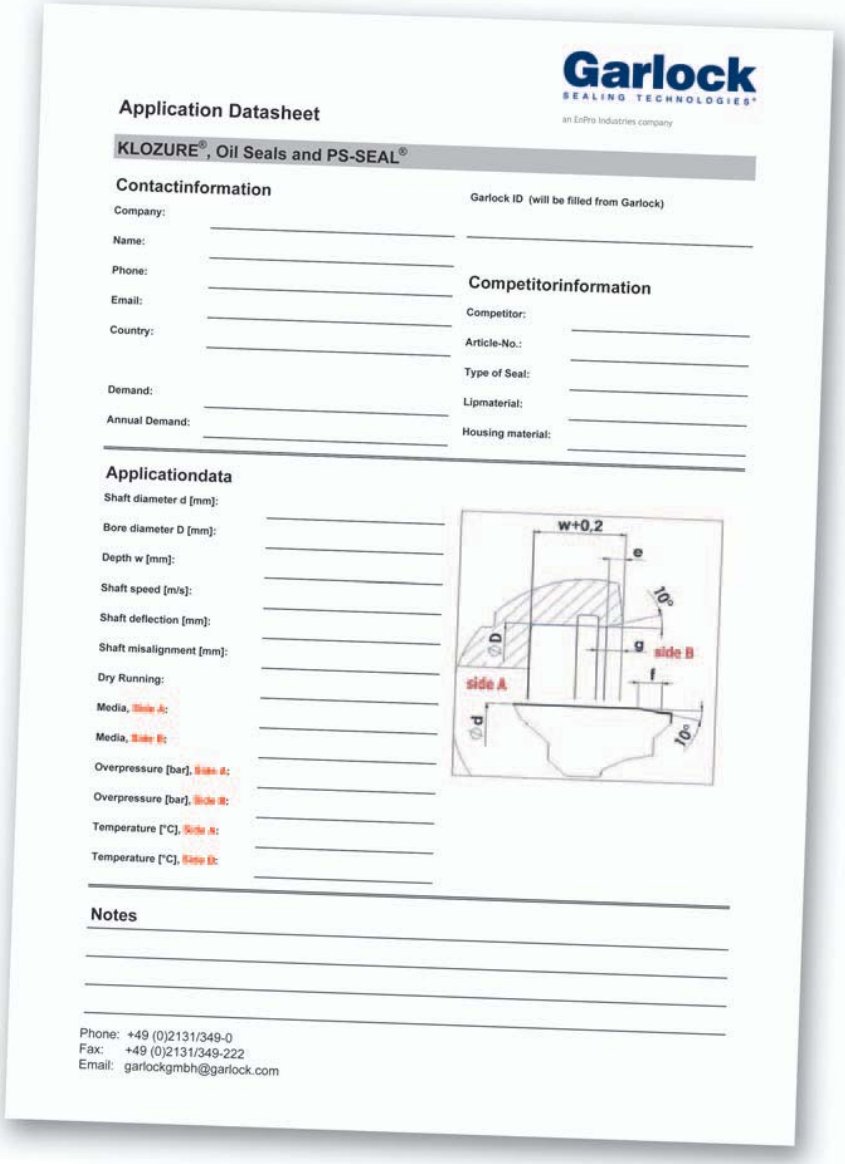

Garlock
SEALING TECHNOLOGIES®
an EnPro Industries company

Application Datasheet

KLOZURE®, Oil Seals and PS-SEAL®

Contactinformation

Company:
Name:
Phone:
Email:
Country:

Demand:
Annual Demand:

Garlock ID (will be filled from Garlock)

Competitorinformation

Competitor:
Article-No.:
Type of Seal:
Lipmaterial:
Housing material:

Applicationdata

Shaft diameter d [mm]:
Bore diameter D [mm]:
Depth w [mm]:
Shaft speed [m/s]:
Shaft deflection [mm]:
Shaft misalignment [mm]:
Dry Running:
Media, Side A:
Media, Side B:
Overpressure [bar], Side A:
Overpressure [bar], Side B:
Temperature [°C], Side A:
Temperature [°C], Side B:

Notes

Phone: +49 (0)2131/349-0
Fax: +49 (0)2131/349-222
Email: garlockgmbh@garlock.com

http://www.garlock.de/
> Produkte > Wellendichtringe > PS-SEAL®

All details and recommendations in this catalogue are based on many years of experience, knowledge and state of the art technology. Unknown influencing variables may qualify generally valid findings. For this reason, binding statements on the compatibility of our products are therefore only possible after practical tests under operating conditions on the customer's premises. Details in this catalogue are therefore not regarded as guaranteed statements.

Garlock
SEALING TECHNOLOGIES®
an EnPro Industries company

Product Range

Hydraulic Components

Oil Seals

Gasketing Products

Metallic Gasketing

Resiliant Metal Seals

Assemblies

Compression Packings

Graphite Seals

Inflatable Seals

Mechanical Seals

Valves

Service

Technical details subject to change without notice. RS-D2 · 0.5 · 07/09

Garlock GmbH
Falkenweg 1
41468 Neuss
Germany
Phone: +49-2131/349-0
Fax: +49-2131/349-222
E-mail: garlockgmbh@garlock.com
http://www.garlock.eu.com

Garlock France S.A.S
90, Rue de la Roche du Geai
42029 Saint-Etienne
France
Phone: +33-4/77435100
Fax: +33-4/77435151
E-mail: garlockfrance@garlock.com
http://www.garlock.eu.com

Garlock (GB) Limited
Unit H5, Premier Way
Lowfield Business Park
Elland,
West Yorkshire, HX5 9HF
United Kingdom
Phone: +44-1422/313600
Fax: +44-1422/313601
E-mail: sales-uk@garlock.com
http://www.garlock.eu.com

Garlock Middle East
P.O. Box 1518
Oilfield Supply Centre
Jebel Ali Free Zone
Dubai U.A.E
Phone: +971-4/8833652
Fax: +971-4/8833682
E-mail: garlock@emirates.net.ae
http://www.garlock.eu.com

Other Garlock facilities: Garlock Inc., N.Y., U.S.A. • Garlock of Canada Ltd. • Garlock de Mexico • Garlock Pty. Ltd., Australia • Pacific Rim Operations, Singapore

Garlock
SEALING TECHNOLOGIES®

an EnPro Industries company